South 7th Evening

TURN BY TURN ROUTE

Leave Transfer Center at 15 minutes past the hour.
Turn west on Cherry to 7th St.
Travel south on 7th St. to Davis.
Turn right onto Davis to Honey Creek Mall.
Continue around mall and exit out on Johnson St.
Turn left on Johnson St. to U.S. 41.
Turn right onto U.S. 41 to Kmart.
Leave Kmart, cross U.S. 41 to Kroger.
Leave Kroger going south on U.S. 41 to Wal-Mart.
Leave Wal-Mart turn right onto 7th St. to Regional Hospital.
Turn left into Regional Hospital and exit onto 4th St.
Take 4th St. around to Johnson Ave.
Turn right into Riverside Plaza.
From Riverside Plaza exit out on Davis to 7th St.
Turn left onto 7th St. to Larry Bird.
Turn right on Larry Bird to 8th St.
Turn right onto 8th St. to Cherry.
Turn left onto Cherry to Transfer Center.

On Request

Towne South Plaza
Books-A-Million
Office Max
Westminster Village
Holiday Inn
Verizon
Old Navy

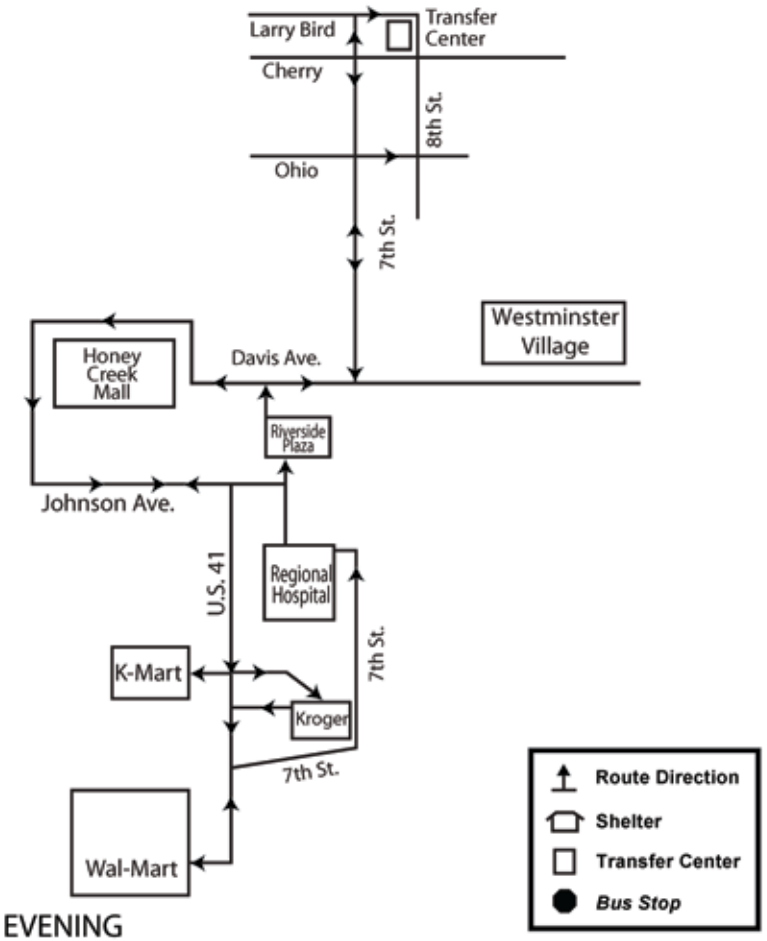

SOUTH 7TH EVENING

** ALL MAPS ARE REPRESENTATIONS OF ROUTES AND ARE NOT OF ACTUAL SCALE.*

Transfer Center	Honey Creek	Wal-Mart	Regional Hospital	Transfer Center
6:15 p.m.	6:30 p.m.	6:45 p.m.	6:50 p.m.	7:05 p.m.
7:15 p.m.	7:30 p.m.	7:45 p.m.	7:50 p.m.	8:05 p.m.
8:15 p.m.	8:30 p.m.	8:45 p.m.	8:50 p.m.	9:05 p.m.
9:15 p.m.	9:30 p.m.	9:45 p.m.	9:50 p.m.	10:05 p.m.
10:15 p.m.	10:30 p.m.	10:45 p.m.	10:50 p.m.	11:05 p.m.